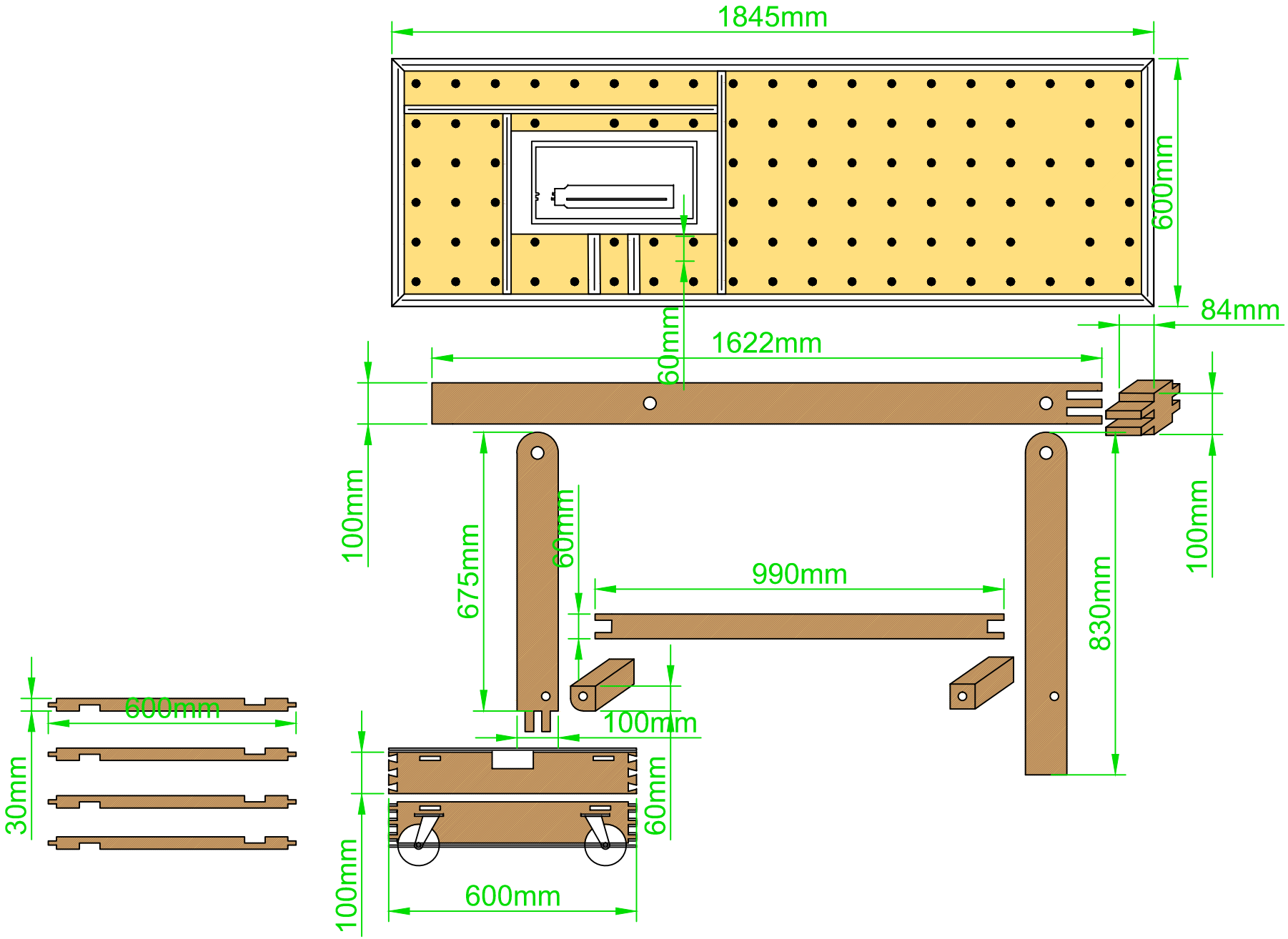
1845mm
600mm
84mm
60mm
1622mm
100mm
675mm
60mm
990mm
830mm
100mm
600mm
30mm
100mm
60mm
100mm
600mm

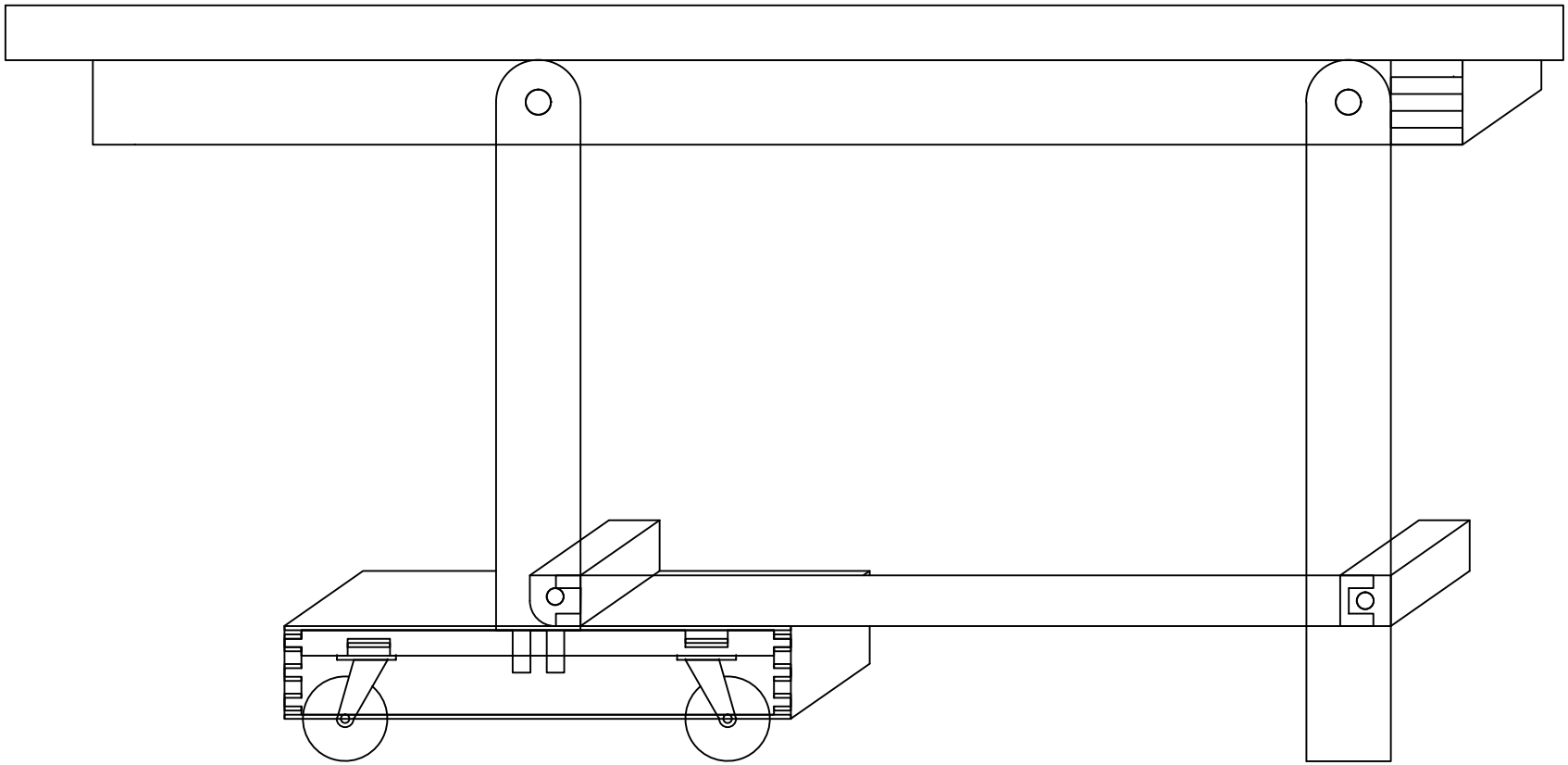

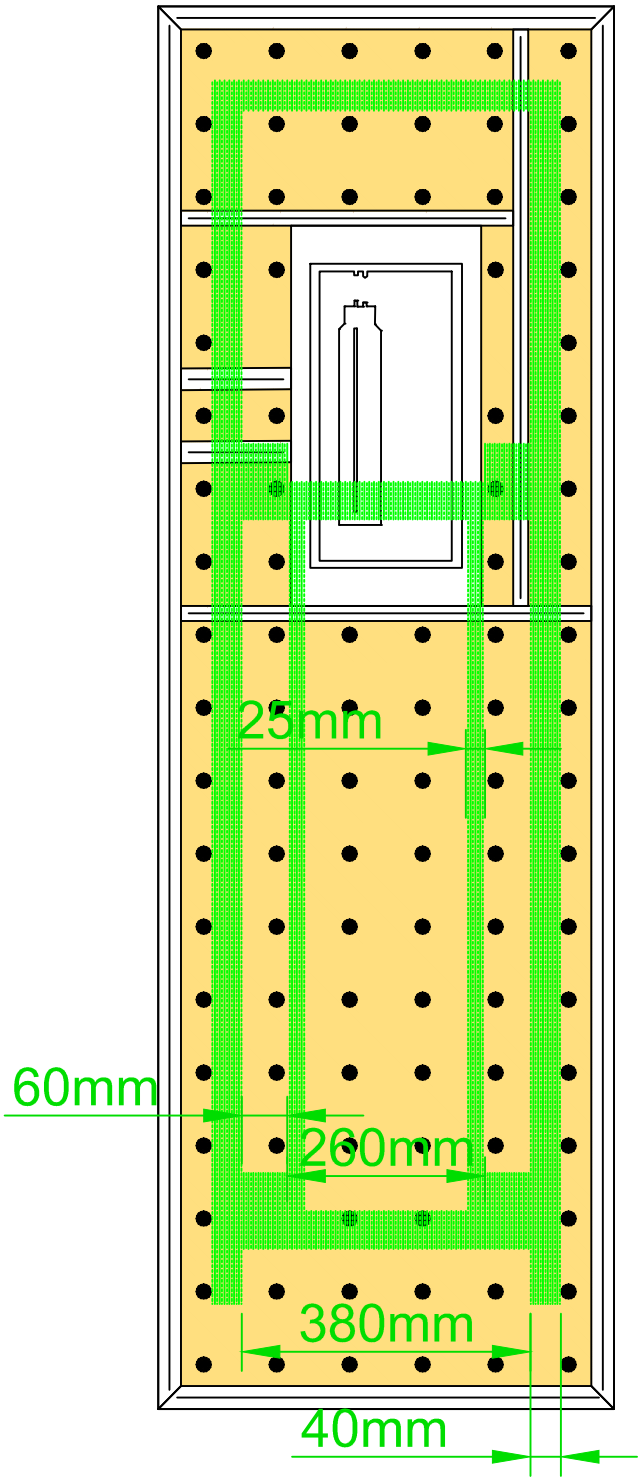
25mm
60mm
260mm
380mm
40mm